Duct Heater

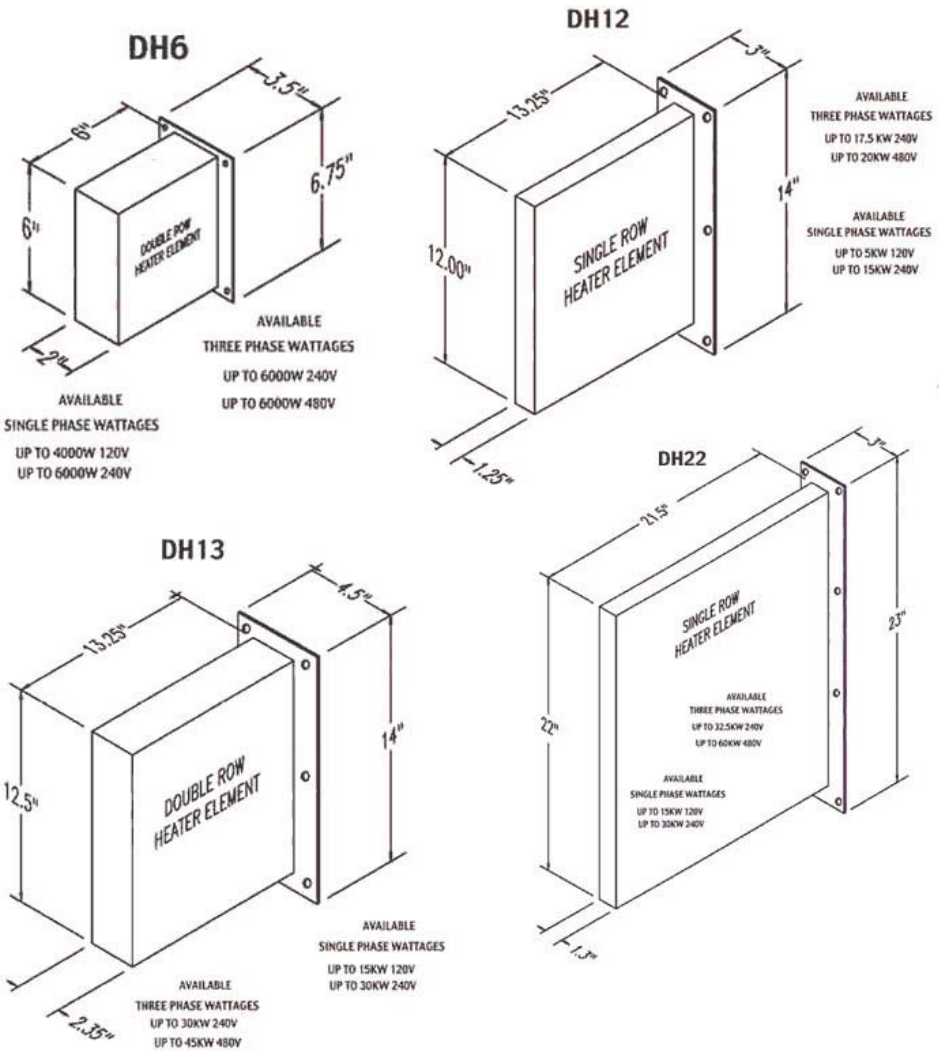
DH6
6"
3.5"
6.75"
6"
2"
DOUBLE ROW HEATER ELEMENT
AVAILABLE
THREE PHASE WATTAGES
UP TO 6000W 240V
UP TO 6000W 480V
AVAILABLE
SINGLE PHASE WATTAGES
UP TO 4000W 120V
UP TO 6000W 240V
DH12
13.25"
3"
14"
12.00"
1.25"
SINGLE ROW HEATER ELEMENT
AVAILABLE
THREE PHASE WATTAGES
UP TO 17.5 KW 240V
UP TO 20KW 480V
AVAILABLE
SINGLE PHASE WATTAGES
UP TO 5KW 120V
UP TO 15KW 240V
DH13
13.25"
4.5"
14"
12.5"
2.35"
DOUBLE ROW HEATER ELEMENT
AVAILABLE
SINGLE PHASE WATTAGES
UP TO 15KW 120V
UP TO 30KW 240V
AVAILABLE
THREE PHASE WATTAGES
UP TO 30KW 240V
UP TO 45KW 480V
DH22
21.5"
3"
23"
22"
1.5"
SINGLE ROW HEATER ELEMENT
AVAILABLE
THREE PHASE WATTAGES
UP TO 32.5KW 240V
UP TO 60KW 480V
AVAILABLE
SINGLE PHASE WATTAGES
UP TO 15KW 120V
UP TO 30KW 240V